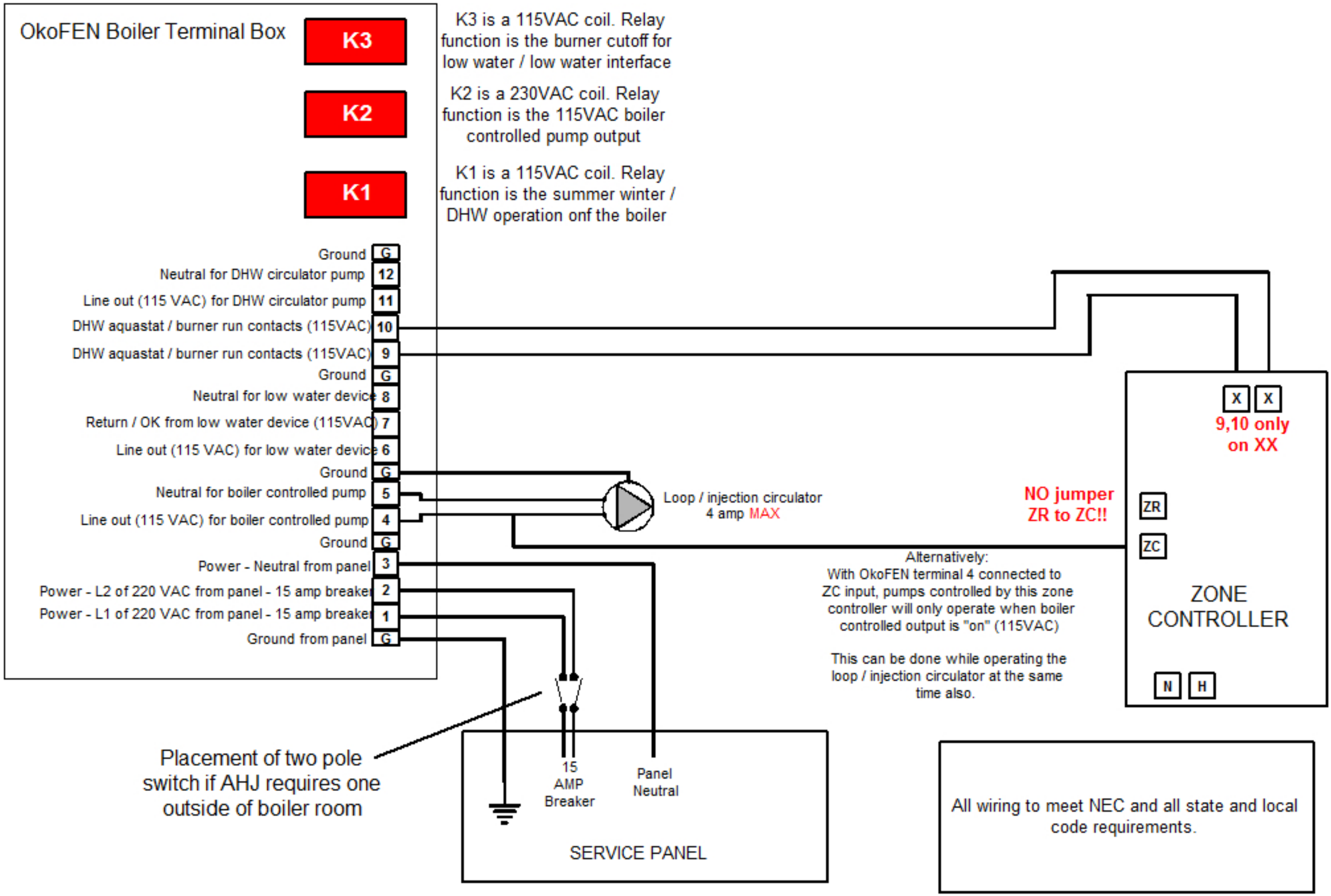MeSys WIRING DIAGRAM for AutoPellet interconnections